Installation Manual
Double DIN Kit

2-DIN	381320-21-1
2-DIN with pocket	281320-21-1
2-DIN with Inbay pocket	241320-21-1

Audi A4 B5 (8D Facelift)* 02/1999 - 10/2000
Audi A4 B5 Avant (8D Facelift)* 02/1999 - 06/2001

** with Symphony head unit*

Compatible with Double-DIN devices:

Double-DIN Navigation

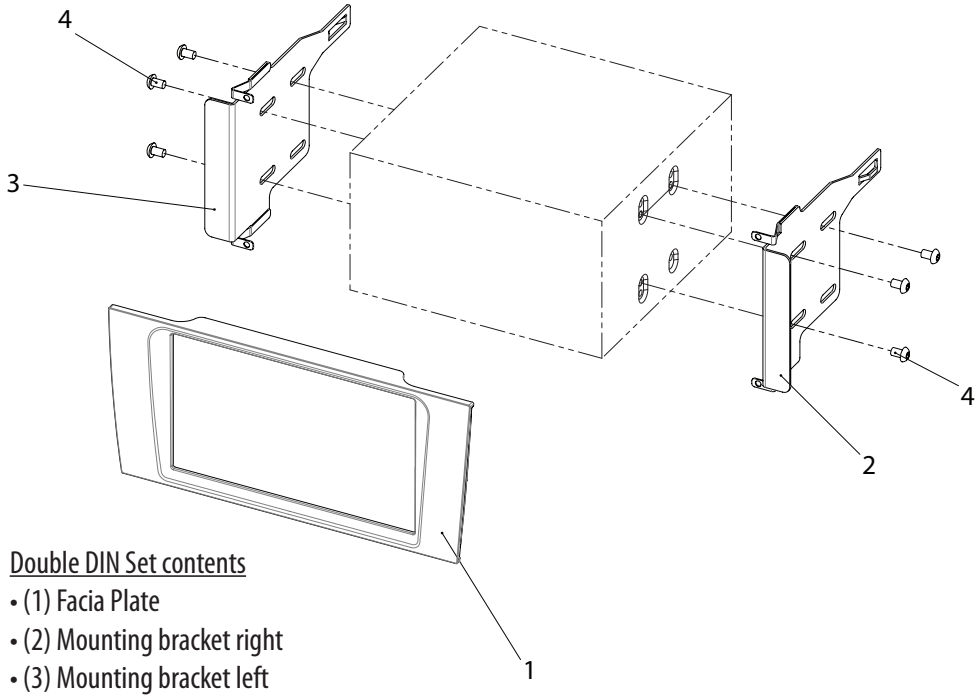

Double DIN Set contents

- (1) Facia Plate
- (2) Mounting bracket right
- (3) Mounting bracket left
- (4) Flat Headed Screw

Installation Manual Double DIN Kit

1. Audi A4 with
   OEM - Symphony head unit

2. Insert radio release keys made for cars with horizontal release slots - e.g. ACV part-no 181320-02*

*optionally / not included

3. Pull OEM head unit towards your direction

   Unplug all connectors carefully

   Remove OEM head unit

4. Dashboard with uninstalled head unit

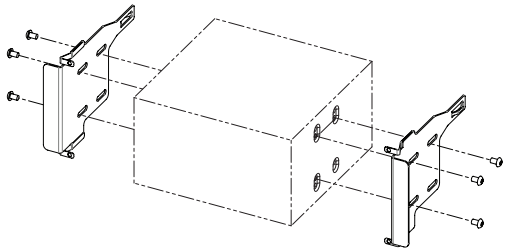

5. **2-DIN only:**

   Mount brackets to 2-DIN head unit

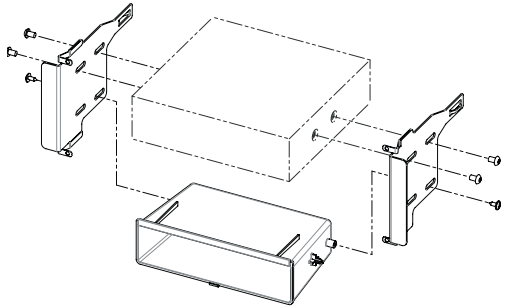

6. **2-DIN with pocket only: (also applies to Inbay pocket)**

   Mount brackets and pocket to 1-DIN head unit

7. Connect all required circuit points

   Push double DIN head unit into dash board

8. Place facia plate on dash board to finish installation

   (The facia plate is fixed by magnets on the rear side)

All installation work must be performed by a qualified professional installer only.
The manufacturer / dealer is not liable for any kind of incidential or indirect damages.